866-650-7827
21739 Highway 64
Canton, Texas 75103
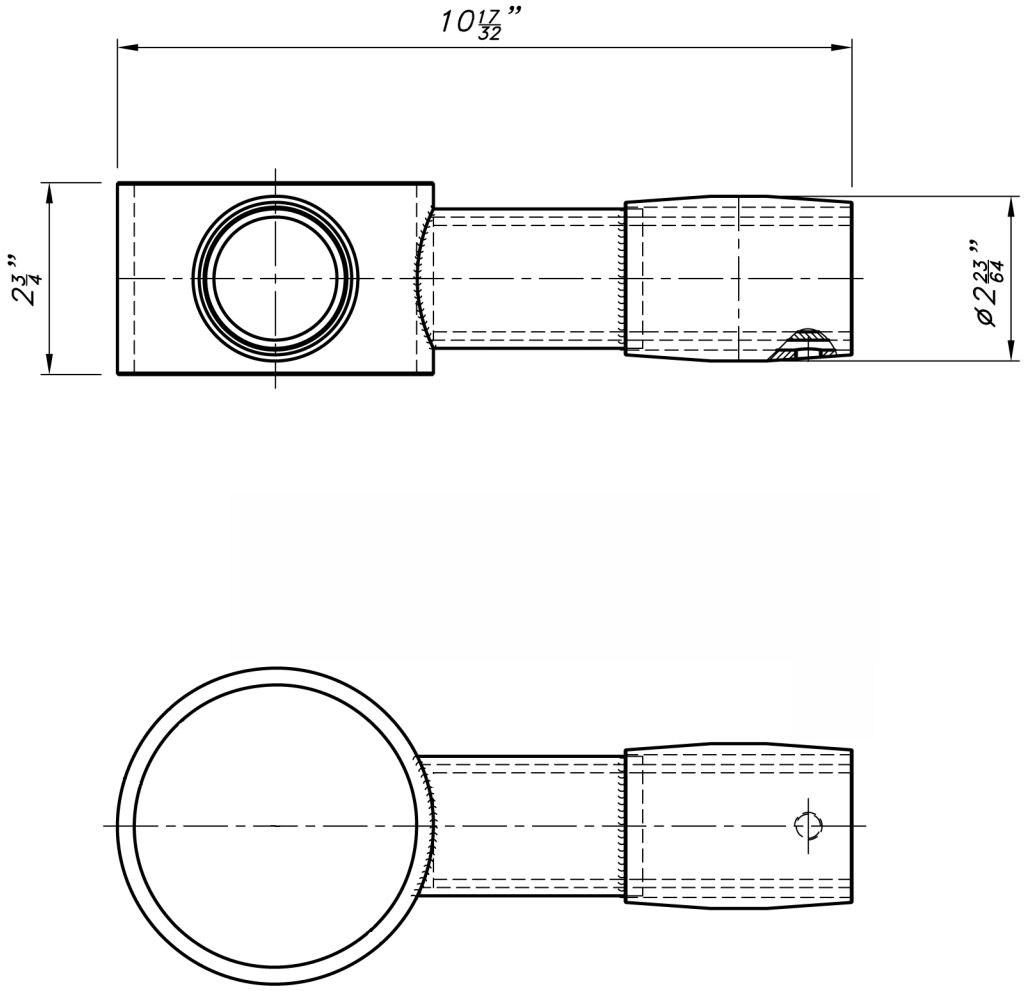
1-WAY STAINLESS HIP